Package Outline

TO-220AB Outline

Dimensions are shown in millimeters (inches)

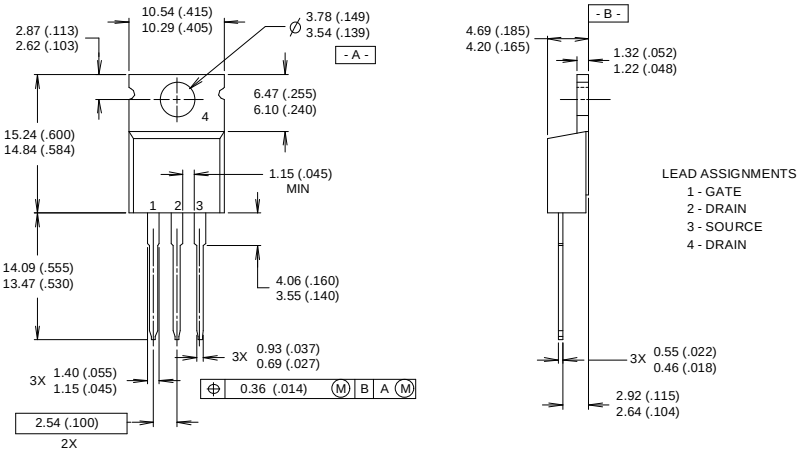

NOTES:

1 DIMENSIONING & TOLERANCING PER ANSI Y14.5M, 1982.

2 CONTROLLING DIMENSION : INCH

3 OUTLINE CONFORMS TO JEDEC OUTLINE TO-220-AB.

4 HEATSINK & LEAD MEASUREMENTS DO NOT INCLUDE BURRS.