2 MODULE ENCLOSURE FOR M36 DIN-RAIL

SERIES 350

Version with knock out blanks for individual terminal configuration available.

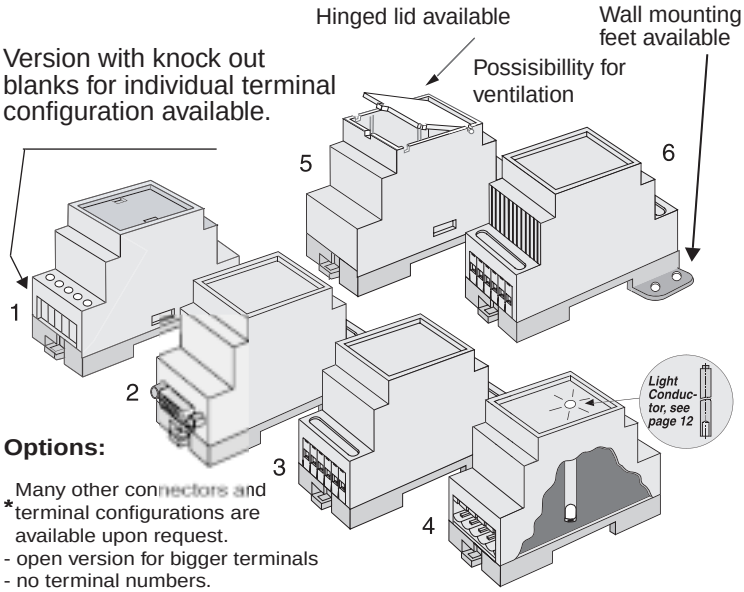

Options:

*Many other connectors and terminal configurations are available upon request.
- open version for bigger terminals
- no terminal numbers.
- red, grey or infra-red lid.
- click in frontpanel.
- hinged lid.
- not all versions are available for all sizes.

Module enclosure for M36 DIN-rail. Series 350 is, if requested, available in several colours and with customer specified holes in the front. Lid, PCB, customized label and packing is available.
Possibility for both base and top PCB.
Trimmers and spindles that fit the height of the box are available.
Hinged lid and open front available.

TECHNICAL DATA:

TOP PART:

Material:	Lexan 940
Colour:	Grey (RAL 7035)
Max. temperature:	100°C
Width:	35.0 mm (2 modules)
Label measure:	41.0 x 30.0 mm
Self-extinguishing:	Acc. to UL94-V0

BASE PART:

Material:	Noryl VO 1550
Colour:	Black (RAL 7021)
Max. temperature:	100°C
Max. wire dia.:	2 x 2.5 mm²
Max. load:	16A (for higher load please enquire)
Terminals:	10 fixed or plugable
Mounting:	DIN-rail (EN50022)
Self-extinguishing:	Acc. to UL94-V0

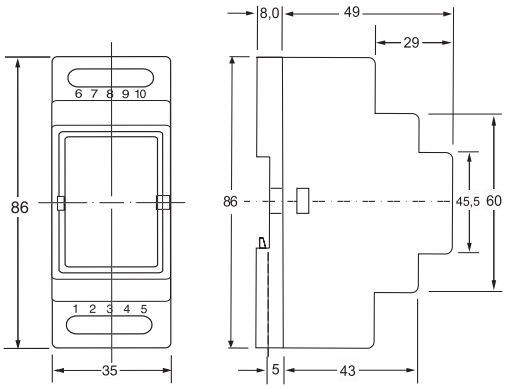

HORIZONTAL PCB DIMENSIONS:

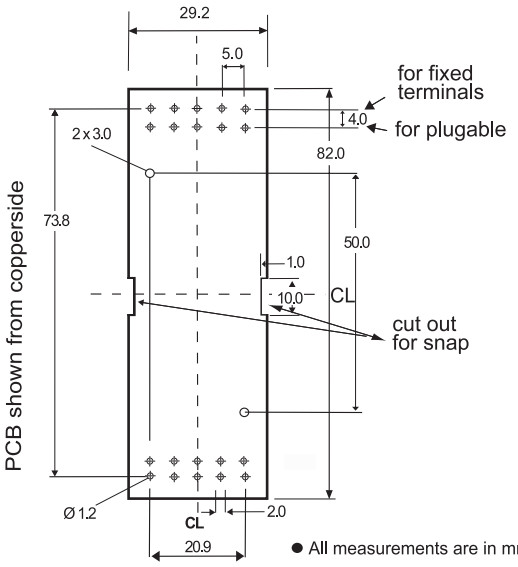

● All measurements are in mm.

●● Please note that most plugable terminals are in 5,08 pitch and need a bigger hole in the PCB

350 Series

Product Code	Description
350-605	Without Terminals
350-605-T	With Terminals

www.boss-enclosures.co.uk