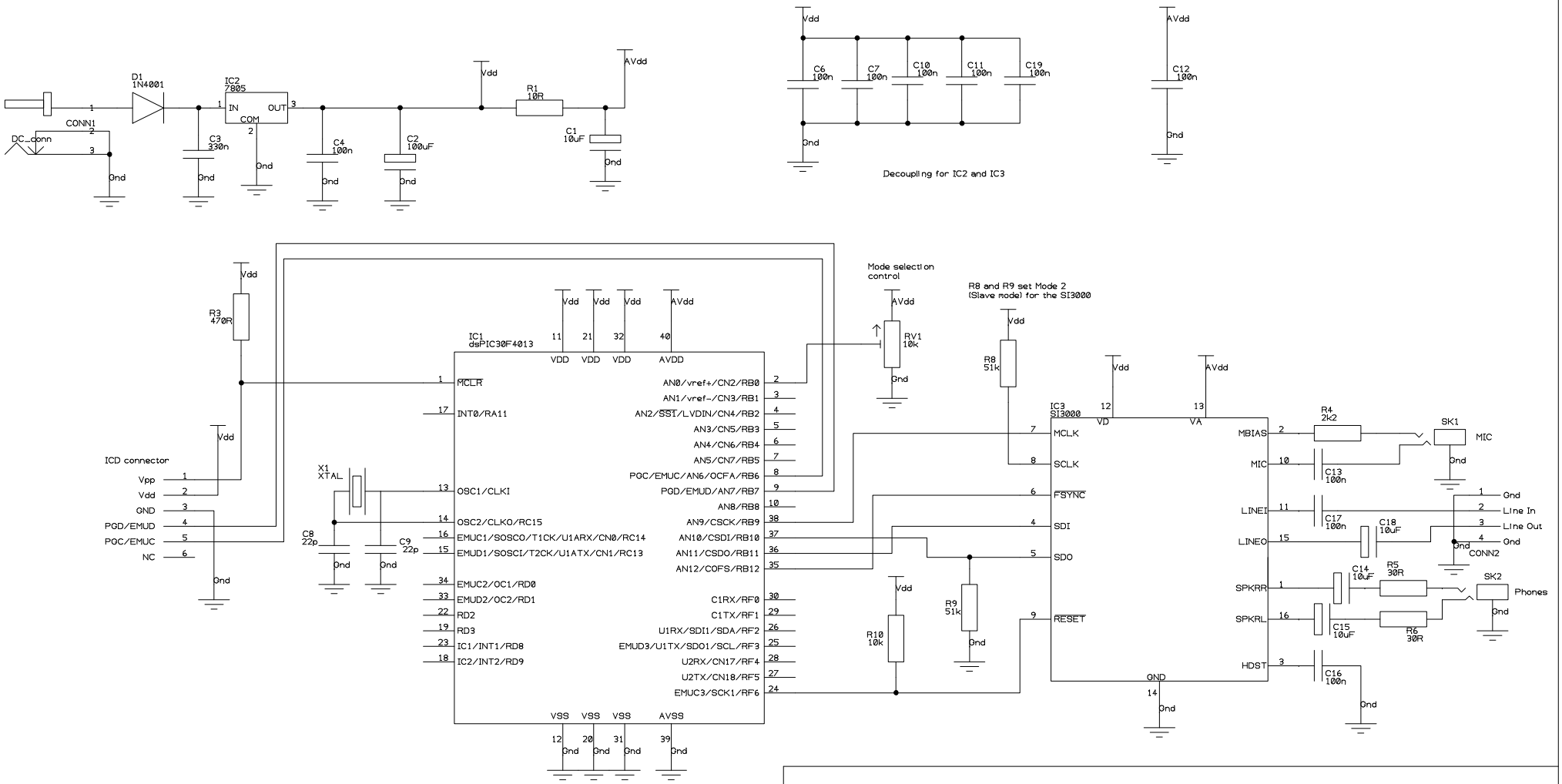

COMPANY NAME:	
DESIGN TITLE:	dsPIC30F4013 audio filter
AUTHOR: Leon	LAST SAVED: 21/04/2005
CHECKED:	DATE:
ISSUED:	DATE:
PAGE: Page1	DRAWING NO. / REVISION:
SCALE:	SIZE: A4 / SHEET 1 OF 1